Electrolux

electrolux.com/register

EWW10****

EWW11****

Enjoy peace of mind. Register your appliance today.

Stay updated on better living services, safety notices and shop for accessories.

1. **Open the camera app on your smartphone and point at the QR code to scan.**

   The product registration QR code is located inside the door rim.

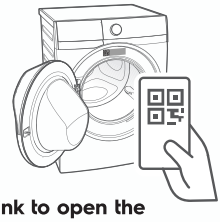

2. **Tap the notification or link to open the registration form.**
3. **Complete your details and enjoy peace of mind.**

Full version of the User Manual is avialable on www.electrolux.com. Alternative, scan QR code, tap Electrolux logo, and search for your appliance.

Welcome to Electrolux! Thank you for choosing our appliance.

Get usage advice, brochures, troubleshooter, service information, buy accessories & spare parts, online product registration:
www.electrolux.com

CUSTOMER CARE AND SERVICE

We recommend the use of original spare parts. When contacting Service, ensure that you have the following data available. The information can be found on the rating plate: Model Name, Product Number Code, and Serial Number.

Warning / Caution-Safety information.

General information and tips.

Environmental information.

The information provided may be subject to change without prior notice due to updates aimed at improving user experience. For the latest information, please visit www.electrolux.com.

CONTENTS

1. SAFETY INFORMATION 3
2. PRODUCT DESCRIPTION 7
3. TECHNICAL DATA 9
4. INSTALLATION 9
5. CONTROL PANEL 15
6. PROGRAMMES 18
7. SMARTSELECT, OPTIONS AND SETTINGS 20
8. BEFORE FIRST USE 24
9. DAILY USE-WASHING (ONLY) 25
10. DAILY USE-DRYING (ONLY) 29
11. DAILY USE-WASHING & DRYING 30
12. WASHING HINTS 31
13. DRYING HINTS 34
14. INTERNATIONAL WASH CODE SYMBOLS 35
15. CARE AND CLEANING 36
16. TROUBLESHOOTING 41
17. ENVIRONMENT CONCERNS 46

1.1 Conditions Of Use

This appliance is intended to be used in household and similar applications such as:

- staff kitchen areas in shops, offices and other working environment;
- farm houses;
- by clients in hotels motels, and other residential type environments;
- bed and breakfast type environments;
- areas for communal use in blocks of flats or in launderettes.

⚠ **WARNING!**
The appliance must not be supplied through an external switching device, such as timer, or connected to a circuit that is regularly switched on and off by utility.

In the interest of your safety and to ensure the correct use, before installing and first using the appliance, read this user manual carefully, including its hints and warnings.

To avoid unnecessary mistakes and accidents, it is important to ensure that all people using the appliance are thoroughly familiar with its operation and safety features.

Save these instructions and make sure that they remain with the appliance if it is moved or sold, so that everyone using it through its life will be properly informed on appliance use and safety.

1.2 Child Safety

- This machine is not intended for use by children or infirm persons without supervision.
- The children should be supervised to ensure that they do not play with the appliance.
- The packaging components (e.g. plastic film, polystyrene) can be dangerous to children-danger of suffocation! Keep them out of children's reach.
- Keep all detergents in a safe place out of children's reach.
- Make sure that children or pets do not climb into the drum.
- This machine is provided with lock option (🔒) to prevent children playing with the control panel.

1.3 General Safety

- It is dangerous to alter the specifications or attempt to modify this product in any way.
- During high temperature wash programme the door glass may get hot. Do not touch it!
- Make sure that small pets do not climb into the drum. To avoid this, please check inside the drum before using the appliance.
- Any objects such as coins, safety pins, nails, screws, stones or any other hard, sharp
  material can cause extensive damage and must not be placed into the machine.
- Wash small items such as socks, laces, washable belts etc. in a washing bag or pillow case as it is possible for such items to slip down between the tub and the inner drum.
- Only use manufacturer's recommended quantities of fabric softener and detergent. Damage to the fabric or appliance can occur if you exceed the recommended amount.
- Do not use your machine to wash articles with whalebones, material without hems or torn material.
- Always unplug the appliance and turn off the water supply after use, clean and maintenance.
- This appliance is not intended for use by persons (including children) with reduced physical, sensory or mental capabilities, or lack of experience and knowledge, unless they have been given supervision or instruction concerning use of the appliance by a person responsible for their safety.
- Under no circumstances should you attempt to repair the machine yourself. Repairs carried out by inexperienced persons may cause injury or serious malfunctioning.
  Contact your local Service Centre. Always insist on genuine spare parts.
- Pre-treatment sprays and stain remover can damage plastic components on your machine. If you use pre-treatment sprays or stain removers, apply them to the clothing well away from your machine.

1.4 Installation

- This appliance is heavy. Care should be taken when moving it.
- When unpacking the appliance, check that it is not damaged. If in doubt, do not use it and contact the Service Centre.
- All packing and transit bolts must be removed before use. Serious damage can occur to the product and to property if this is not adhered to. See relevant section in section "Unpacking".
- After having installed the appliance, check that it is not standing on the inlet and drain hose and the worktop is not pressing the electrical supply cable.
- If the appliance is installed on a carpeted floor, please adjust the feet in order to allow air to circulate freely.
- Always be sure, that there is no water leakage from hoses and their connections after the installation.
- Any plumbing work required to install this appliance should be carried out by a qualified plumber.
- Any electrical work required to install this appliance should be carried out by a qualified electrician.

1.5 Use

- Only wash fabrics which are designed to be machine washed. Follow the instructions on each garment label.
- Do not overload the appliance. See the relevant section in the user manual.
- Before washing, ensure that all pockets are empty and buttons and zips are fastened. Avoid washing frayed or torn articles and treat stains such as paint, ink, rust, and grass before washing.
- Garments which have been in contact with volatile petroleum products should not be machine washed. If volatile cleaning fluids are used, care should be taken to ensure that the fluid is removed from the garment before placing in the machine.
- Never pull the power supply cable to remove the plug from the socket; always hold the plug itself.
- Never use the machine if the power supply cable, the control panel, the working surface, or when the base is damaged; and where the inside of the machine is accessible.
- If the supply cord is damaged, it must be replaced by the manufacturer, its service agent or similarly qualified persons in order to avoid a hazard.
- As some duvets and eiderdowns should be washed/dried in large commercial machine because of their bulk, please check with the manufacturer of the item before washing/drying in a domestic machine.
- The users should always check that they have not left their gas lighters, and matches (disposable or otherwise) in their clothing.
- Never tumble dry items which have had contact with chemicals such as dry cleaning fluid. These are of volatile nature and could cause an explosion. Only tumble dry items which have been washed in water or require airing.
- Plastic detergent dispensers/capsules should not remain in the drum during the drying cycle, as the plastic used is not designed to withstand heat. If you wish to wash through to dry you should use the conventional detergent dispenser drawer.

⚠ CAUTION!

During the Drying phase, pressing on the Pause touch key will temporarily stop the cycle. The door will remain locked as the temperature inside the drum is high and may pose a safety risk. The door will automatically unlock when the machine's sensors detect that the temperature is at a safe level.

Never stop a washer-dryer before the end of the drying cycle unless all items are quickly removed and spread out so that the heat is dissipated.

Do not dry cloths in washer-dryer with dry clean solvents. Also, do not use laundry enhancement products during the drying cycle.

To minimize the risk of fire in a washer-dryer, the following should be observed:

- Items that have been spotted or soaked with vegetable or cooking oil constitute a fire hazard and should not placed in a washer-dryer.
  Oil-affected items can ignite spontaneously, especially when exposed to heat sources such as in washer-dryer.
  The items become warm, causing an oxidation which creates heat.
  If the heat cannot escape, the items can become hot enough to catch fire.
  Piling, stacking or storing oil-affected items can prevent heat from escaping and so create a fire hazard.
- If it is unavoidable that fabrics contain vegetable or cooking oil or have been contaminated by hair care products be placed in washer-dryer, it should first be washed in hot water with extra detergent - this will reduce, but not eliminate the hazard.
- The "cool down" cycle of washer-dryer is used to reduce the temperature of the items. It should not be removed from the washer-dryer or piled or stacked while hot.
- Items that have been previously cleaned in, washed in, soaked in or spotted with petrol/gasoline, dry cleaning solvents or other flammable or explosive substances should not be placed in washer-dryer.
- Highly flammable substances commonly used in domestic environments include acetone, denatured alcohol, petrol/gasoline, kerosene, spot removers (some brands), turpentine, waxes, and wax removers.
- Items containing foam rubber (also known as latex foam), similarly textured rubber, or materials e.g. shower caps, waterproof textiles, rubber-backed articles, and clothes or pillows fitted with foam rubber pads should not be dried in a washer-dryer on a heat setting.
- Foam rubber materials can produce fire by spontaneous combustion when heated.
- Fabric softeners or similar products should not be used in a washer-dryer to eliminate the effects of static electricity unless this practice is specifically recommended by the manufacturer of the fabric softener or product.
- Undergarments that contain metal reinforcements should not be placed in a washer-dryer.
- Damage to the washer-dryer can result if metal reinforcements come loose during drying. When available a drying rack could be used for such items.
- Plastic articles such as shower caps, babies' waterproof napkin covers should not be placed in washer-dryer.

1.6 Electrical Connection

ⓘ "An incorrect power supply may void your warranty."

Check that your domestic electrical installation can take the maximum load required from technical data, also taking into account any other appliances in use.

When the appliance is installed, the power supply cable must be easily accessible.

⚠ WARNING!
May cause electric shock! if the machine is not connected to an earthed/ground system. DO NOT touch the wet clothes and metal parts.
For safety reasons do not use double adapters, extension cords and multi-plug adapters.

⚠ CAUTION!
Connect the machine to an earthed socket outlet.
The manufacturer declines any responsibility for damage or injury through failure to comply with the above safety precaution.
Should the appliance power supply cable need to be replaced, this shall be carried out by our Service Centre.

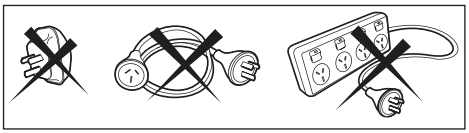

2. PRODUCT DESCRIPTION

2.1 General overview

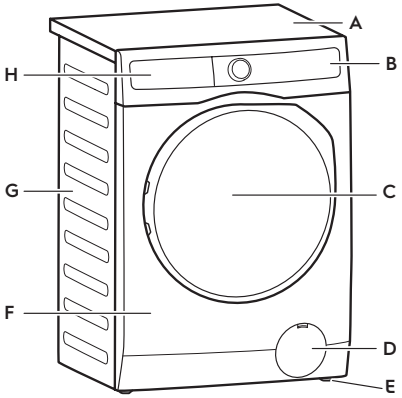

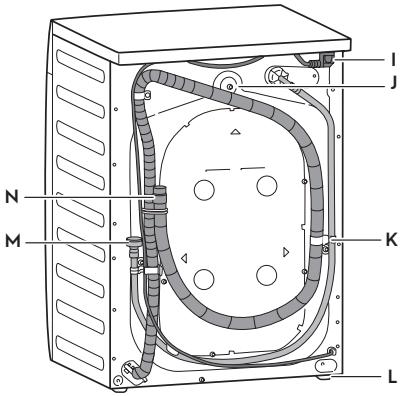

A Worktop

B Control Panel

C Door

D Drain Pump Filter

E Level Adjustment Feet

F Front Panel

G Cabinet

H Detergent/Softener Dispenser Drawer

I Mains Cable

J Transit Bolts

K Transit Bolts & Hose Support

L Level Adjustment Feet

M Water Inlet Hose

N Water Drainage Hose

2.1.1 Detergent/Softener Dispenser Drawer

The detergent dispenser drawer compartment information, For details about using detergent and additives.

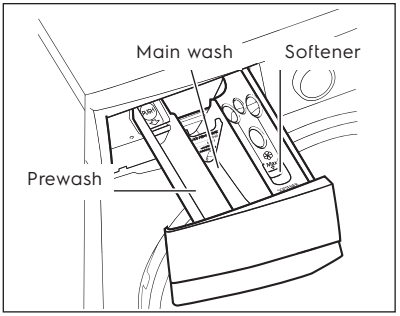

2.1.2 Door (when open)

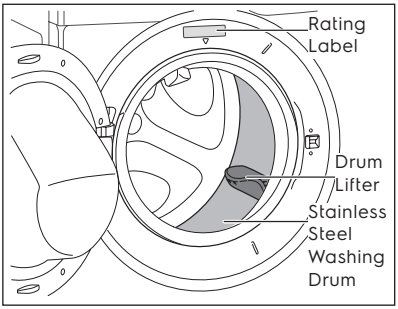

2.1.3 Drain Pump Filter (when open)

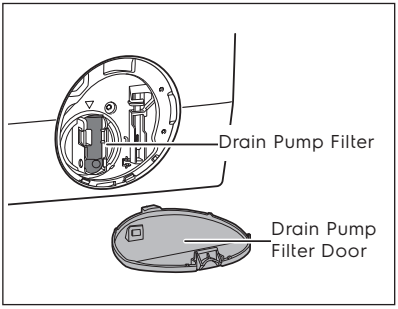

2.1.4 Level Adjustment feet

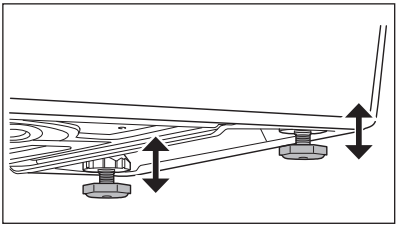

2.1.5 Transit Bolt (when remove)

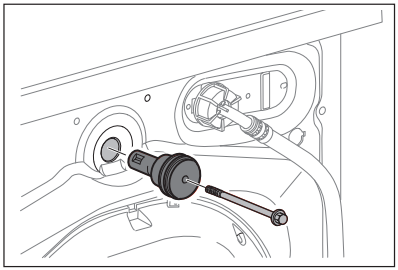

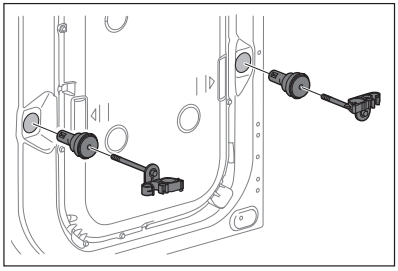

⚠ CAUTION!
Transit bolts must be removed before using the appliance.

2.2 Accessories

Plastic Caps
To close the holes on the rear side of the cabinet after the removal of the transit bolts.

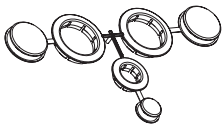

3. TECHNICAL DATA

Dimensions (Height / Width / Depth)	850 x 600 x 659 mm
Power supply (Voltage / Frequency)	220 - 240 V~/ 50 Hz
Total power absorbed	EWW10******: Wash: 2000 W / Dry: 1500 W EWW11******: Wash: 2100 W / Dry: 1500 W
Water supply pressure (Maximum / Minimum)	0.8 MPa / 0.05 MPa
Maximum Spin Speed	1200 rpm

4. INSTALLATION

4.1 Unpacking

You are advised to keep all transit devices so that they can be refitted if the machine ever has to be transported again.

⚠ WARNING!
All transit bolts and packing must be removed before using the appliance. Requires using a wrench or hexagon head block number 10 to remove the transit bolts at all 3 points.

⚠ CAUTION!
Carefully put down the appliance with the rear side on it. Make sure not to damage the hoses.

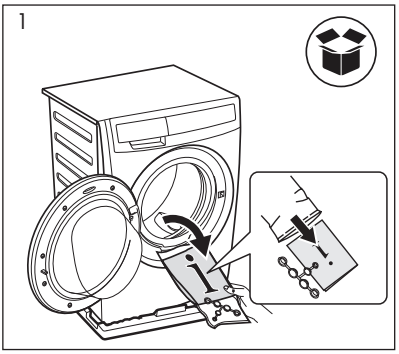

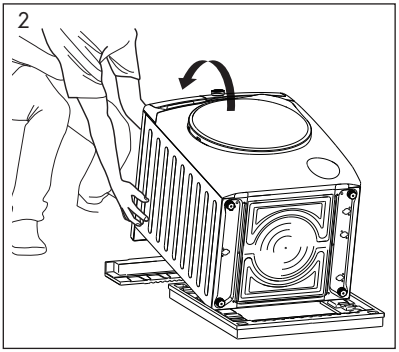

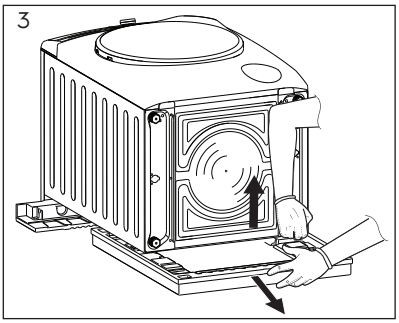

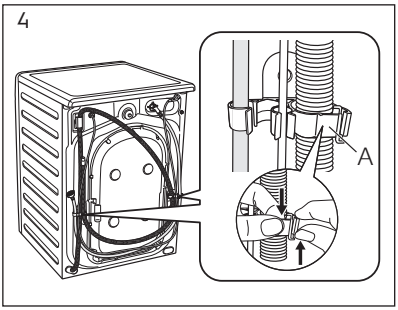

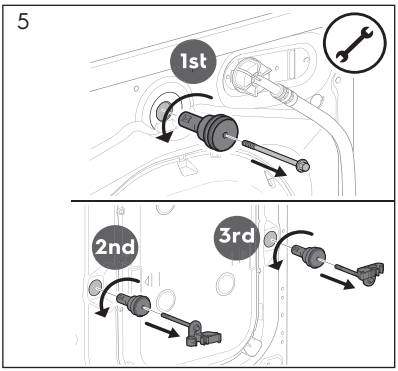

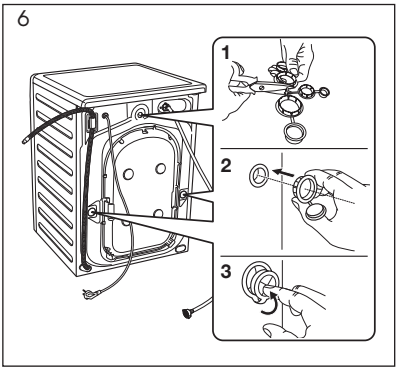

4.2 Positioning

⚠ WARNING!
Before proceeding with installation, read the safety information, and dimension preferred.

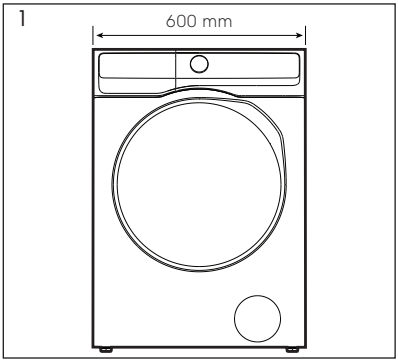

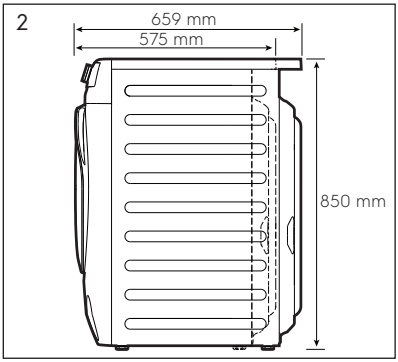

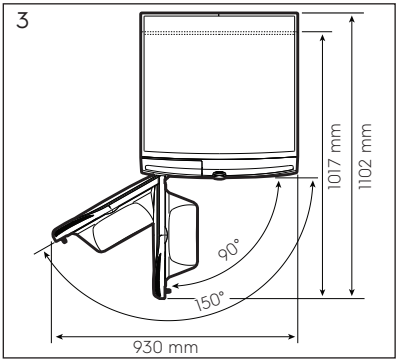

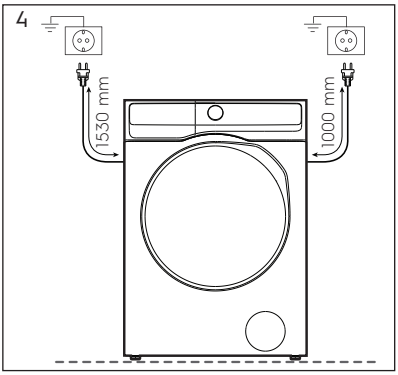

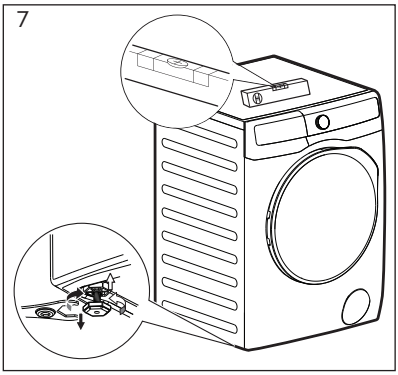

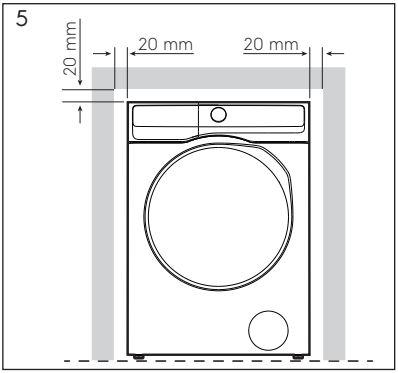

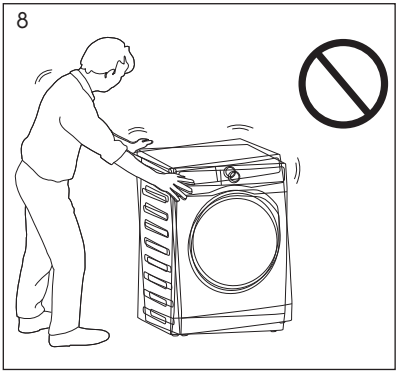

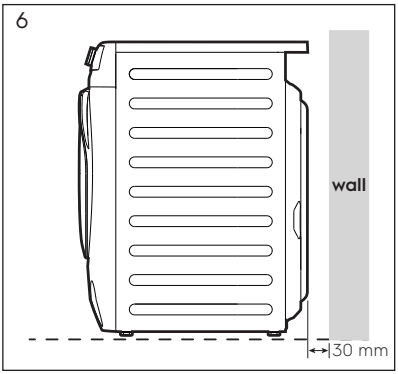

⚠ CAUTION!

When installing the product make sure the levelling feet is not pressing on the power cord.

When the machine is levelled, try to rock it from corner to corner.
If it does rock, adjust the legs again until it is levelled and does not rock.

Never place cardboard, wood, or similar materials under the machine to compensate for any unevenness in the floor. Install the machine on a flat hard floor. Make sure that air circulation around the machine is not impeded by carpets, rugs, etc.

The appliance must not be installed behind a lockable door, a sliding door, or a door with a hinge on the opposite side to that of the machine, in such a way that a full opening of the door is restricted.

4.3 Water Inlet

1. Remove the connector from the water inlet hose.

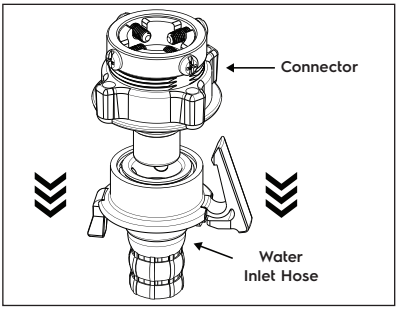

2. Loosen all 4 screws on the connector using a screwdriver.

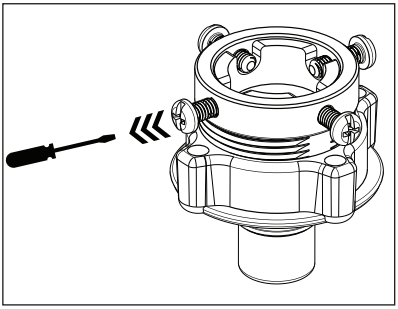

3. Push the connector with the water tap and tighten the 4 screws. Twist lower part of connector to the right.

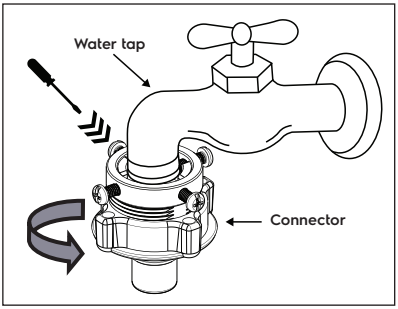

4. Push the water inlet hose into the connector until it locks securely.

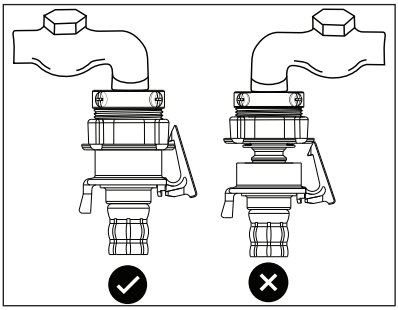

5. Loosen the ring nut to angle the hose to the left or right depending on the position of your water tap. Do not place the inlet hose downwards. After positioning the inlet hose, be sure to tighten the ring nut again to prevent leaks.

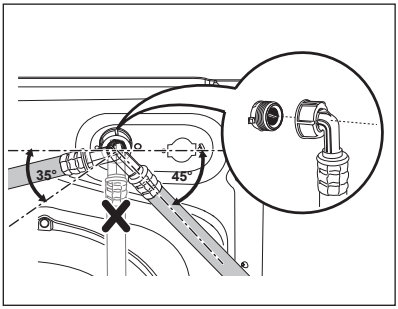

ⓘ After connecting the hose, open the tap to check for any water leakage. If the connection leaks, close the tap and start again from step 1

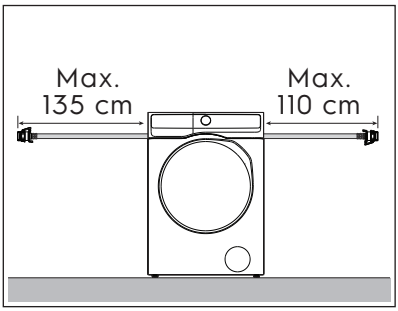

4.4 Water Drainage

ⓘ If you want to be purchased the optional extra, please contact your local retailer or service centre.

Hose guide kit (optional Extra)

1242916003
Plastic Hose Guide

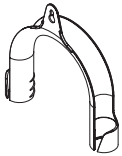

The end of the drain hose can be positioned in three ways:

- **Hooked over the edge of a sink,** using the plastic hose guide supplied with the machine.
  Fitting Hose Guide
  In this case, make sure the end cannot come unhooked when the machine is being emptied. This could be done by tying it to the tap with a piece of string or attaching it to the wall.

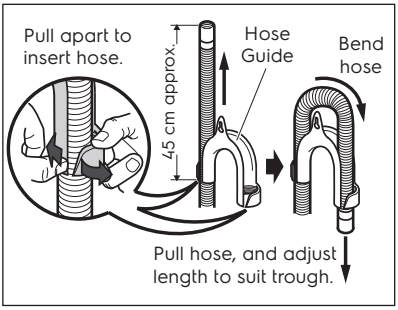

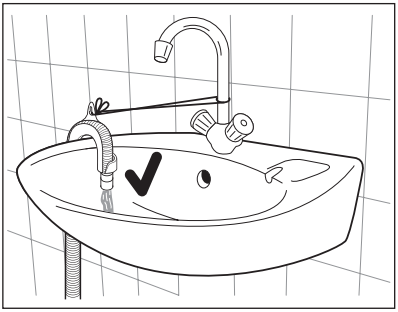

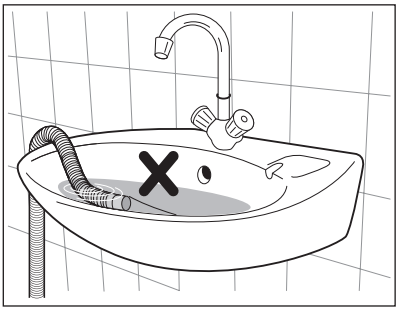

- **In a sink, drain pipe branch.**
  This branch must be above the trap so that the bend is at least 60 cm above the ground.
  Push the drain hose onto the spigot and secure with a clip, ensure a loop is formed in the drain hose to prevent waste from the sink entering the appliance.

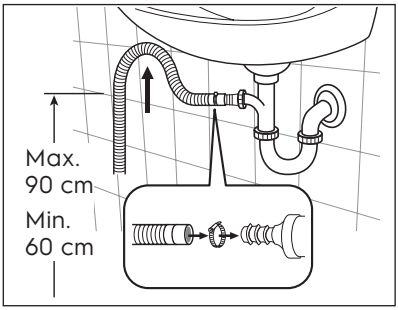

- **Directly into a drain pipe,** at a height of not less than 60 cm and not more than 90 cm.
  The end of the drain hose must always be ventilated, i.e. the inside diameter of the drain pipe must be larger than the outside diameter of the drain hose.

  The drain hose must not be twisted or curled. Run it along the floor; only the part near the drainage point must be raised.

  For the correct functioning of the machine, the drain hose must remain hooked on the proper support piece situated on the top part of back side of the appliance.

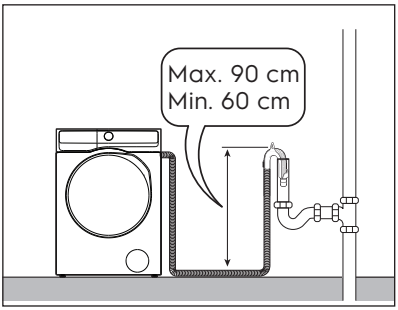
Max. 90 cm
Min. 60 cm

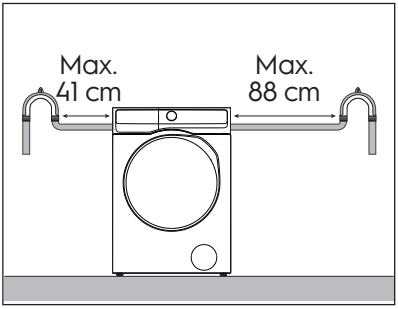
Max.
41 cm
Max.
88 cm

5. CONTROL PANEL

5.1 Control Panel Description

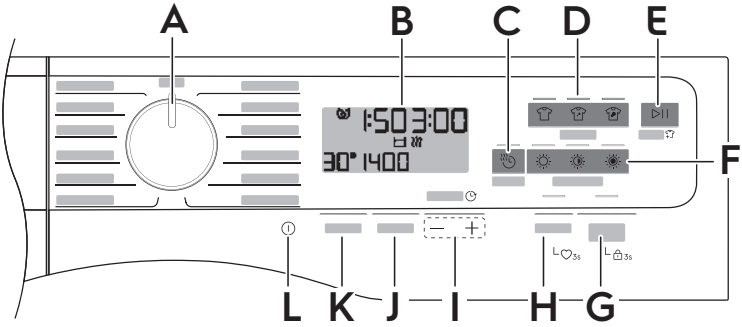

A Programme selector knob

B Display

C Time Dry touch key

D SmartSelect touch key

- Light touch key
- Normal touch key
- Intensive touch key

E Start/Pause touch key

(Add clothes option)

F Dryness Level touch key

- Iron Dry touch key
- Cupboard Dry touch key
- Extra Dry touch key

G Hygienic Care touch key

(Child lock option)

H Prewash touch key

(Favourite programme save option)

I Finish In adjustment

+ Plus touch key

— Minus touch key

J Spin touch key

K Temp touch key

L On/Off touch key

5.2 Display

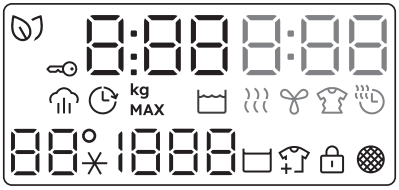

	SmartLeaf feedback icon
	Door locked icon
	Stream icon
	Finish In icon
	Rinse Hold icon
	Add clothes icon
	Child Lock icon
	The Temperature area: Temperature icon Cold water
MAX	Maximum load icon
	The spin area: Spin Speed indicator (– – –) No Spin indicator, Spin phase if off.
	Wash phase icon (included Prewash phase)
	The digital icon can show: • Programme duration, washing phase • Delay time • Cycle End (0:00) • Warning and Error codes
	Drying phase icon
	The digital icon can show: • Programme duration, drying phase • Delay time • Cycle End (0:00) • Warning and Error codes

	Time Dry icon
	Anticrease phase icon
	Cooling phase icon
	Clean filter reminder icon

ⓘ The icon, function or phase names that appeared in this manual may differ from your product.

5.3 SmartLeaf feedback

SmartLeaf symbols give feedback on consumption, guiding the user to save energy, time and water.

This feature will indicate levels of energy savings in a programme based on:

1. Programme Duration with rated capacity
2. Energy consumption
3. Water consumption
4. Wash temperature

SmartLeaf feedback is not affected by:

1. Amount of loaded laundry
2. Spin speed selection

There are three different level of SmartLeaf feedback indicated:

1. No SmartLeaf (no icon in the display)
2. One leaf icon
3. Two leaf icon

ⓘ

- Prewash will reduce the SmartLeaf symbol by 1 leaf.
- Temperature = 40°C will reduce the SmartLeaf symbol by 1 leaf.
- Temperature > 40°C will reduce the SmartLeaf symbol by 2 leaves.

Wash and Dry

For Wash+Dry mode, SmartLeaf setup values are as calculated as follows:

1. For all cycles with 2 leaves in dry mode, in washing + drying mode the values are the same as in only wash mode.
2. For all other cycles, the washing + drying values are set to 1 leaf
3. Washing + drying values reduced by 1 leaf in case of Extra Dry or Sport Jacket programme.

6. PROGRAMMES

6.1 Programme Chart

Programme; Temperature range	Max. Spin speed (rpm)	Max. Load (Dry Clothes)		Type of load and soil level
		Wash	Dry	
Cottons; Cold to 90°C	1200	Max [1]	Max [1]	White cotton and coloured cotton. Normally, heavily and lightly soiled items.
Eco Cottons; 40°C and 60°C	1200	Max [1]	Max [1]	Low energy cycle for cottons. Decreases temperature and extends time to reach good washing results.
DelicatesPlus; Cold to 40°C	1200	4 kg	-	Delicate fabrics. Thin cottons, acrylics, viscose and polyester.
Bedding; Cold to 60°C	800	3 kg	-	Washing cycle for three bed linen sets.
DuvetCare 60	-	-	2 kg	Steam vapour cleaning and drying in 60 mins.
Tub Clean; 60°C	-	-	-	Maintenance cycle with hot water to clean and freshen the drum and to remove residue that may cause odour. For the best result use this cycle once a month. Before running this cycle, remove all items from the drum. Pour a cup of chlorine bleach or a washing machine cleaner in the washing phase compartment.
Spin	1200	Max [1]	Max [1]	To spin the laundry and to drain the water in the drum. All fabrics, except woollens and delicate fabrics.
Sports; Cold to 40°C	1200	4 kg	-	Sport wear, synthetic fibres like polyester, polyester/elastane blends, polyamide. Suitable to remove sweat and body soil from technical sport garments.
Sanitise; 60°C	1200	Max [1]	-	White cotton items. This high performance wash programme combined with steam vapour, removes more than 99,99% of bacteria and viruses[2] keeping the temperature above 60°C throughout the washing phase; with an additional action on the fibres thanks to a vapour phase, an enhanced rinsing phase ensures a proper removal of detergent and micro-organism residues. This programme ensures also a proper reduction of pollens/allergenic items.
Quick 15; Cold to 30°C	1200	1.5 kg	-	Lightly soiled synthetics or mixed fabrics.
Full Wash 45; Cold to 30°C	1200	Max [1]	4 kg	Daily wear coloured cotton clothes such as shirts, blouses, towels, and undergarments. Ideal for a normal level of soil.

Programme; Temperature range	Max. Spin speed (rpm)	Max. Load (Dry Clothes)		Type of load and soil level
		Wash	Dry	
WashDry 60; 30°C to 40°C	1200	1 kg	1 kg	1 KG mixed fabrics. Wash and dry in 60 mins.
♡ **(Favourite)**	-	-	-	Recall your favourite programme.

1) Maximum capacity depends on model of machine.
Model: EWW1023P5SC 10/7 kg, EWW1123P5WC 11/7 kg (wash/dry capacity)

2) Tested for Staphylococcus aureus, Enterococcus faecium, Candida albicans, Pseudomonas aeruginosa and MS2 Bacteriophage in external test performed by Swissatest Testmaterialien AG in 2021 (Test Report No. 202120117).

6.2 Programme Options Compatibility

Programme	Option									
	SmartSelect			No Spin	Rinse Hold	Hygienic Care[1]	Prewash	Finish In	Time Dry[2]	Dryness Level[2]
Cottons	■	■	■	■	■	■	■	■	■	■
Eco Cottons		■		■	■	■	■	■	■	■
DelicatesPlus	■	■	■	■	■	■	■	■		
Bedding	■	■	■	■		■		■		
DuvetCare 60	■							■		
Tub Clean										
Spin				■				■	■	■
Sports	■	■	■	■	■		■	■		
Sanitise			■					■		
Quick 15	■			■	■			■		
Full Wash 45		■		■	■			■	■	■
WashDry 60								■		
♡ (Favourite)										

1) "Hygienic Care" option can be combined with temperature 40 to 90°C only.

2) Do not select a spin speed LOWER than that proposed by the appliance to avoid a too long drying time so saving energy. In any case the reduction of the spin speed is only possible after selecting drying.

7. SMARTSELECT, OPTIONS AND SETTINGS

7.1 SmartSelect

Washing levels

This new feature has been created to guide the user to save energy, time and water, with the aim of improving the sustainability of cycles, the care and maintenance of fabrics and consumer experience.

For each washing cycle it is possible to have different durations and consumption, based on the level of soiling of the laundry.

There are possible options:

1. **Light**
   This option is recommended for very lightly soiled clothing, without visible stains. The suggested temperature is cold.
2. **Normal**
   This option is ideal for everyday light soiled clothes, with small stains for example sweat. The suggested temperature is 30°C.
   The light soil level is the one being used most in the default setting.
3. **Intensive**
   This option is recommended for normal/ heavy soiled clothes, with for example food spills or mud.

To activate one of this options turn the dial to select the desired programme. The default soil level icon light on.

To change it tap on the related icon.

ⓘ Every SmartSelect level can modify temperature, spin speed and programme duration of the selected cycle.

ⓘ If a certain soil level is not available, pressing it will generate an error, a double beep and symbol blinks twice.

Time Dry ( )

In the programme where it is selectable, press this touch key to set the time that suits the fabrics you have to dry. The display shows the set value.

This option is used to select desired drying time in programmes where time drying is available. With each tap on the touch key the time value increases by 10 minutes steps up to the maximum time allowed for selected programme (refer to Programme Options Compatibility).

If Time Dry or Dryness level are selected, tapping on desired smart washing level, deactivate wash cycle and remains only the drying phase. After Time Dry have reached the maximum time, the appliance shift automatically to the default dryness level; If a dryness level is selected, tapping on it, the drying cycle will be deactivate and sets only the default washing programme.

ⓘ If you wish to open the door during the anticrease phase or interrupt it, press Start/Pause touch key.

Time Dry Option Guidelines:

Type of fabric	Load (kg)	Spin Speed (rpm)	Suggested Times (Hrs)
Cotton and linen (bathrobes, bath towels, etc.).	**Max.**[1]	1200	3-4
	2.5-4.5	1200	2-3
	2	1200	1-2
Synthetic or mixed fabric items (jumpers, blouses, underwear, household linen, etc.).	3	1200	2-3
	1	1200	1
Wool and hand washable wool.	1	1200	2

1) Maximum capacity depends on a sticker in front of the machine.

Dryness Levels

For drying the three possible choices are:

- **Extra dry**
  This option is recommended for towelling materials.
- **Cupboard dry**
  It is the default drying level selected for most programme, and it is indicated for items to be stored.
- **Iron dry**
  This option is recommended to dry garments suitable for ironing.

ⓘ To activate one of this options turn the selector knob to select the desired programme.
The default soil level icon light on.
To change it press on the related icon.

ⓘ If you wish to open the door during the anticrease phase or interrupt it, press Start/Pause touch key.

Dryness Option Guidelines:

Dryness Level	Type of fabric	Load
Extra Dry Ideal for towels or similar	Cotton and linen (bathrobes, bath towels, etc.)	up to **Max.**[1] kg
Cupboard Dry Suitable for items to put away without ironing	Cotton and linen (bathrobes, bath towels, etc.)	up to **Max.**[1] kg
	Synthetics and mixed fabrics (jumpers, blouses, underwear, household linen)	up to 3 kg
Iron Dry Suitable for ironing	Cotton and linen (sheets, tablecloths, shirts, etc.)	up to **Max.**[1] kg

1) Maximum capacity depends on a sticker in front of the machine.

Duration of the drying cycle

The drying time can vary according to:

- the final spin speed;
- dryness level (Extra Dry or Cupboard Dry or Iron Dry);
- the type of laundry;
- the size of load.

Fibre residue

After drying fluffy fabrics, such as new towels, it is advisable to perform a Tub Clean programme to ensure that any residue that may remain in the tub is completely removed and does not stick to garments dried afterwards. After each drying cycle, clean the drain pump filter. Please refer to care and cleaning in section "CARE AND CLEANING".

ⓘ **Additional drying**

Should the laundry still be too wet at the end of the programme, set another short drying cycle.

The final part of a washer-dryer cycle occurs without heat (cool down cycle). This ensures the laundry will be left at a low temperature.

⚠ **WARNING!**

To prevent the formation of creases or shrinking of fabrics, avoid excessive drying.

7.2 Options

Temperature Touch key

Touch this touch key repeatedly to increase or decrease the wash temperature if you want your laundry to be washed at a temperature different from the one proposed by the machine. (– – ⁎ corresponds to cold wash).

ⓘ Tapping on the SmartSelect level could change the selected temperature. SmartSelect level could automatically change, according to the temperature selected.

Spin Touch key

Press this touch key repeatedly to increase or decrease the spin speed or select Rinse Hold, if you want your laundry to be spun at a speed different from the one proposed by the machine.

- **No Spin (– – –)**
  No spin option eliminates all the spin phases and increase the number of rinses.
- **Rinse Hold (▭)**
  By selecting this option the water of the last rinse is not emptied out and the drum turns regularly to prevent the laundry creases.

The door is still locked to indicate that the water must be emptied out.

ⓘ The door stays locked with the water in the drum. To continue the cycle, you must press ▷|| (Start/Pause).

Hygienic Care Touch key

Select this option to add approximately 30 minutes of tumbling in vapour after the rinse cycle. The indicator of this option will be on.

- Vapour may not necessarily be visible inside the drum during a vapour cycle. Vapour is created below the drum and allowed to naturally rise into the clothes.
- Vapour may not be present during the entire vapour cycle.
- At the end of the Vapour cycle, the clothes will be warmer, softer and detached from the drum.

ⓘ If Vapour option is selected, rinse temperatures will be elevated.
During a vapour cycle, you may notice vapour exiting from the drain hose of the machine, this is normal and there is no cause for alarm.

Prewash Touch key

Select this option if you wish your laundry to be pre-washed before the main wash. Use this option for heavy soil. The indicator of this option will be on.

When you set this function, put the detergent into the prewash compartment.

This function increase the programme duration.

Finish In Touch key (⏲)

ⓘ Set this option as last after programme and other options selection, otherwise it can be cancelled if you change some setting.

This option allows choosing the time within which a programme should terminate.

The programme end can be postponed by one 1 hour each tap on the key button, until a maximum of 24 hours.

The display shows the normal programme duration alternatively with the set programme end time (expressed in hours 0h). The minimum selectable time corresponds to rounded up hour of the maximum duration of a programme (e.g. if the cycle duration lasts 3:15 hours, the minimum selectable time will be 4h).

After programme start, the door is locked and the appliance starts the SensiCare phase. When load estimation ends the time digit counts down in steps of one hour and in steps of 1 minute during the last hour.

7.3 Settings

Child Lock Option

Your appliance is provided with CHILD SAFETY LOCK which permits you to leave the appliance unsupervised with the door closed without having to worry that children might be injured by or cause damage to the appliance.

ⓘ Set this option after pressing the Start/Pause touch key.

To set "Child Lock" option:

- To activate the option, press and hold "Hygienic Care" touch key about 3 seconds until the display shows the icon " 🔒 ".

  ⓘ If you press any touch key while Child Lock is activated, the icon " 🔒 " will flash on display 3 times along with buzzer sound.

  This function remains enabled even after the appliance is switched off.

- To deactivate the option, press and hold this touch key until the icon goes off.

Save Favourite (♡)Programme

Programme settings that are frequently used can be saved (e.g. Cottons, 60°C, 1200 rpm, with Prewash and Hygienic Care).

To programme/re-programme Favourite with your own selections and save them, proceed as follows:

1. Put machine in Stand-By mode.
2. Select your desired wash settings.
3. To save favourite programme, press and hold "Prewash" touch key about 3 seconds, then you will hear the buzzer sound and " F AU " appear on the display.

To recall the favourite programme, turn selector knob to " ♡ " position. You favourite programme will appear on the display.

Enabling/Disabling End-Of-Wash Buzzer

This setting permits you to either enable or disable the buzzer at the end of the programme. As an example, you might wish to disable this buzzer when you start a wash when going to bed, so that when the wash finished approximately 1 hour later, it will not disturb you through the night.

ⓘ Error warning beeps such as critical faults are not disabled.

- To disable the buzzer sound, press "Temp" and "Spin" touch keys at the same time until the icon " bOF " will show on display along with buzzer sound.
- To return to default configuration press these 2 touch keys at the same until the icon " bOn " will show on display along with buzzer sound.

7.4 Start/Pause (▷||) and Add Clothes (👕) Touch key

This touch key has 2 functions:

1. Start/Pause (▷||)

After you have selected the desired programme and options, press this touch key to start the machine. The Start/Pause pilot light will stop flashing and remain lit. If you have selected a "Finish In" option, the countdown will begin and will be shown on the display.

To interrupt a programme which is running, press this touch key to pause the machine, the Start/Pause pilot light flashes.

To restart the programme from the point at which it was interrupted, press this touch key again, the Start/Pause pilot light will stop flashing.

2. Add Clothes ( )

ⓘ You can only add clothes when the icon " " shown on the display.

1. Pressing the "Start/Pause" touch key to pause the programme.
2. Wait for the machine to come to a complete stop before opening the door (wait for door lock " " icon to turn off).
3. Add clothing and close the door.
4. Resume the programme by pressing "Start/Pause" touch key again.

8. BEFORE FIRST USE

ⓘ During installation or before first use you may observe some water in the machine. This is a residual water left in the machine after a full functional test in the factory to ensure the machine is delivered to customers in perfect working order and is no cause for concern.

1. Ensure that the electrical and water connections comply with the installation instructions.
2. Put 2 litres of water in the detergent compartment for washing phase. This activates the drain system.
3. Select a Cottons cycle at 90 °C, without any laundry in the machine, to remove any manufacturing residue from the drum and tub then start the machine.

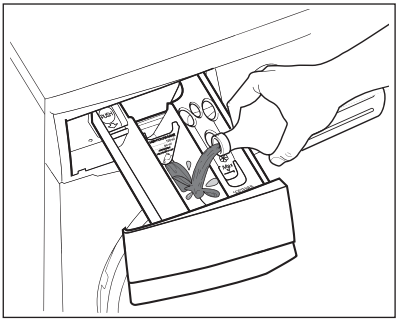

ⓘ The Figures that take place in this manual are schematic and may not correspond exactly with your product. If the subject parts are not included in the product you have purchased, then it is valid for other models.

9. DAILY USE-WASHING (ONLY)

9.1 Loading The Laundry

1. Turn the water tap on.
2. Connect the main plug to the main socket.
3. Press the On/Off touch key to turn on the machine. Turn the knob to set a programme. The machine will propose a temperature and automatically select the spin speed provided for the programme you have chosen.

   The selector knob can be turned either clockwise or counter-clockwise.
4. Check and remove objects (if there are any) that could be trapped in the fold.

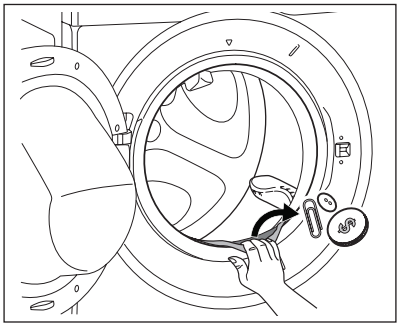

5. Place the laundry in the drum, one item at a time, shaking them out as much as possible. (Refer to chapter "WASHING HINTS")
6. Close the door.

> ⚠ **WARNING!**
> Make sure that no laundry remains between the seal and the door.

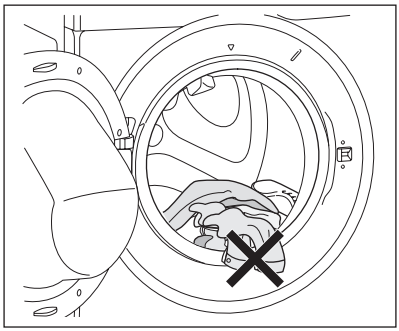

9.2 Using Detergent And Additives

> ⓘ Please refer to section "Detergents Type and Quantity of Detergent" before use.

> ⓘ The Figures that take place in this manual are schematic and may not correspond exactly with your product. If the subject parts are not included in the product you have purchased, then it is valid for other models.

1. Detergent Dispenser Drawer.
   The detergent dispenser is divided into three compartment.

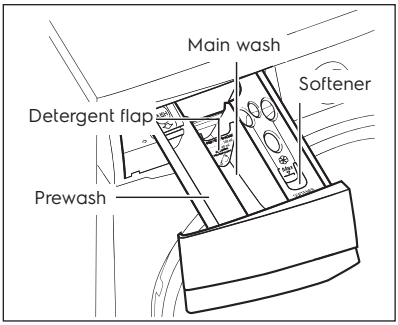

- **Compartment "PREWASH"**
  This compartment is only used for detergent when a "Prewash" option is selected.
- **Compartment "MAIN WASH"**
  This compartment is used for detergent on all programmes.
- **Compartment "SOFTENER"**
  This compartment is used for fabric conditioner and starching agent.

- **Detergent flap ( );**
  Flap before input a powder or liquid detergent.

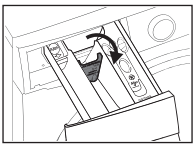

Position down: for liquid detergent.

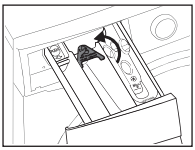

Position up: for powder detergent

ⓘ When you use the liquid detergent.

- Do not use gelatinous or intense liquid detergents.
- Do not put more liquid than the maximum level.
- Do not set the "Prewash" phase.
- Do not set the "Finish In".

2. Measure out the detergent and the fabric softener;

   - Pull out the dispenser drawer until it stops.
   - Measure out the amount of detergent required, pour it into the main wash compartment.

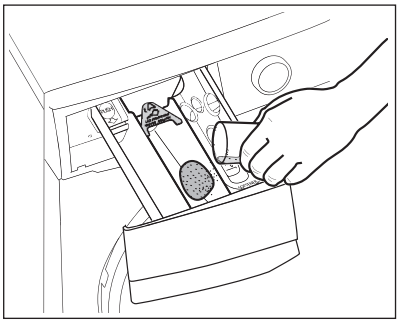

   - If you wish to carry out the "Prewash" phase, pour it into the Prewash compartment.

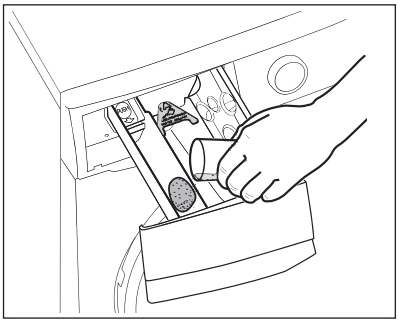

   - If required, pour fabric softener into the Softener compartment.

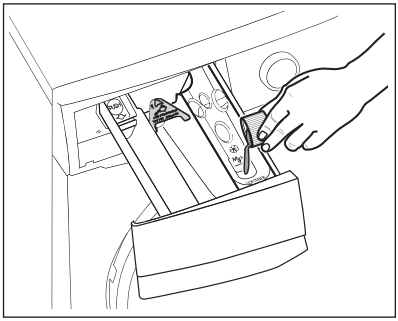

   - Close the drawer gently.

ⓘ The softener amount used must not exceed the "MAX" mark in the drawer.

If you use intense softeners it is recommended to dilute with water.

Residues of detergent, softener and water may remain in the dispenser. It is recommended to clean the dispenser regularly to remove any residue.

9.3 Options Setting

1. If you want your laundry to be spin or use temperature different from the one proposed by the machine, press "Spin" and "Temp" touch keys repeatedly to change the spin speed and temperature.
   Press the option touch keys, if you want your laundry to be washed with special functions.

ⓘ Different functions can be combined which is dependent on the programme selected.

If an option is not compatible with the wash programme selected, the symbol "– – –" will flash on display along with buzzer sound.

2. If you want to define the end of the washing programme, press the "Finish In" touch key repeatedly to choose your machine working time.

9.4 Starting A Cycle (▷||)

To start a programme, press the Start/ Pause touch key. The corresponding pilot light will stop flashing and a default programme duration will be displayed on the screen.

After approx. 15 minutes from the start of a programme:

- The appliance will automatically adjust the selected programme duration according to the type and size of the load.
- The display will show adjusted programme duration.

ⓘ If you press any touch key while a programme is operating, the symbol " – – – " will flash on display along with buzzer sound. (except Start/Pause touch key and On/Off touch key)

9.5 Interruption Of A Programme

- To pause, press Start/ Pause.
  The indicator will start flashing.
- Press the Start/Pause again.
  The programme will continue.

9.6 Changing A Programme

Changing a running programme **is possible only by switching off** the appliance.

- Press the "On/Off" touch key to cancel the programme and to turn off the appliance.
- Press the "On/Off" touch key again to turn on the machine.

Now you can set a new wash programme and change any available options. Press Start/Pause to start the new programme.

ⓘ The appliance will not drain the water (except programmes; Sanitise, Spin, Tub Clean).

9.7 Changing The Options

It may be possible to change some of the options after a wash programme has started.

1. Press the Start/Pause touch key. The indicator will start flashing.
2. If available change the options that you wish.
3. Press Start/Pause again. The programme will continue.

9.8 Opening The Door

While a programme or the Finish In is operating, the appliance door is locked and the display shows the indicator "⊂⊙".

First, set the machine to PAUSE by pressing the "Start/Pause" touch key. Wait until the door lock indicator goes off, then the door can be opened.

If the door lock icon "⊂⊙" does not disappear, this means that the machine is already heating and the water level is above the bottom edge of the door or the drum is turning. In this case the door CAN NOT be opened. If you need to open it, you must drain the water to open the door.

⚠ **WARNING!**

In case of emergency please refer to section "Emergency door opening".

9.9 At The End Of The Programme

- The appliance stops automatically.
- The acoustic signal will operate.
- The display will show " 0:00 ".
- The indicator of the touch key Start/ Pause goes off.
- The door lock icon "🔒" goes off.
- Remove the laundry from the appliance. Make sure that the drum is empty.
- Keep the door partly open, to prevent mildew and odours.
- Turn off the water tap.

ⓘ At the end of the programme, the time remaining can suddenly decrease from 7 minutes or less to 0 due to the overestimated total programme time during the load sensing phase. In some cases (with perfectly balanced load) the programme time can be shorter than the time estimated after the load sensing phase is completed. This is a normal behaviour of the machine and not a cause for concern as it does not compromise its performance.

9.10 When The Washing Programme Is Completed, But There Is Water In The Drum

(Option "Rinse Hold ▭" is used.)

- The drum turns regularly to prevent the creases in the laundry.
- The indicator "Start/Pause" flashes to remind you to drain the water.
- The door lock icon "🔒" is on. The door stays locked.

ⓘ You must drain the water to open the door.

To drain the water:

1. Press the "Start/Pause ▷|I" touch key. The appliance drains the water and spins with the maximum spin speed for selected programme.
   Alternatively, before pressing the "Start/Pause" touch key, you can press the "Spin" touch key to change the spin speed. You can select "No Spin (– – –)", if you want the machine to only drain the water.
2. When the programme is completed and the door lock icon "🔒" goes off, you can open the door.
3. Press "On/Off" touch key to deactivate the appliance.

ⓘ After approximately 18 hours, if you do not press Start/Pause touch key, the appliance will drain and spin automatically.

9.11 AUTO Off Mode

The AUTO Off mode automatically deactivates the appliance to decrease the energy consumption when:

- You do not press any touch key for 5 minutes before you press "Start/ Pause".
  - Press "On/Off" touch key to activate the appliance again.
- After 5 minutes from the end of the washing programme.
  - Press "On/Off" touch key to reactivate the appliance. Display will show the end of the last wash.
  - Press any touch key again to show the last wash programme.

10. DAILY USE-DRYING (ONLY)

ⓘ The water tap must be open and the drain hose must be positioned in the sink or connected to the drain pipe.

10.1 Preparation to drying

1. Press the On/Off touch key to turn on the machine.
2. Load the laundry. Make sure the load size does not exceed the maximum drying capacity of the machine.
3. Turn the selector knob to the programme suitable for the items to dry.
   When selecting a programme by default washing level indicator illuminates availability for few seconds.
4. To activate drying mode only, deactivate the wash mode first by pressing on the illuminated washing level in that SmartSelect.
   Then pressing the Time Dry or Dryness Level. The drying symbol will appear on the display and the corresponding drying level LEDs illuminates.

ⓘ When drying a big amount of laundry, to have good drying performances, make sure that the laundry itself is not rolled up and that is uniformly distributed in the drum.

10.2 At the end of the drying programme

- The appliance stops automatically.
- The acoustic signals operate (if they are active).
- In the display " 0:00 " comes on.
- The indicator of the Start/Pause " ▷|| " touch key goes off. The door locked " " goes off and the door unlocks.
  The appliance continues to operate with the anticrease phase for approximately 30 minutes or more if Anticrease option was set.
  The anticrease phase reduces creasing.
  You can remove the laundry before the anticrease phase is completed. We recommend, for better results, that you remove the laundry when the phase is almost completed or completed. The icon " " remains lit.
- Press the On/Off touch key for some seconds to deactivate the appliance.

ⓘ After some minutes from the end of the programme, the energy saving function deactivates the machine automatically.

1. Remove the laundry from the machine.
2. Make sure that the drum is empty.

ⓘ After drying phase, clean the drum, the seal and the inside of the door with a wet cloth.

11.1 Complete wash & dry programme

Automatic Non-Stop programme or programmes

Depending on the model, the appliance may be equipped with one or more Wash and Dry programmes, automatic one-go programmes where it is not necessary to set the drying phase manually (refer to programme change).

Proceed as follows:

1. After loading laundry and detergent, press the On/Off touch key for some seconds to activate the appliance.
2. Set the Wash And Dry programme by means of the programme selector knob.
3. Touch the Start/Pause " ▷II " touch key to start the programme.

Non-automatic wash & dry programmes

In some washing programmes, you can combine the washing cycle and the drying phase selecting one of the dryness level shown in the panel.

Proceed as follows:

1. After loading laundry and detergent, press the On/Off touch key for some seconds to activate the appliance.
2. Load the laundry one item at a time.
3. Put the detergent and the additives in the appropriate compartment.
4. Turn the programme selector knob to the washing programme. The appliance defaults to the washing only mode and the indicator of the default soil level touch key is on. The display shows the default temperature and spin. If necessary, change them according to your laundry. The display also shows the maximum recommended load for washing phase.
5. Set the desired options, if there are available. (refer to programme options compatibility)
6. Press on the desired dryness level touch key to activate also the drying function. The appliance defaults shown the default drying level for the programme selected.
7. Touch the Start/Pause " ▷II " touch key to start the programme.

11.2 Washing and Drying - Automatic levels

1. Press on the Dryness Level touch key repeatedly until the display shows the required level. The indicators in the display illuminate accordingly:
   a. Iron dry ☼ : for cotton items;
   b. Cupboard dry ☼ : for cotton and synthetic items;
   c. Extra dry ☼ : for cotton items.

The time value on the display is the duration of both cycles washing and drying, calculated on a default load size.

ⓘ To have a good drying by using less energy and in a shorter time, the appliance does not let you set a too low spin speed for the items to be washed and dried.

2. Touch the Start/Pause " ▷II " touch key to start the programme.

In the display the door locked "⊸" icon comes on.

The display also shows the remaining programme time.

11.3 Washing and Timed Drying

1. Press on the Time Dry touch key repeatedly to set the desired time value (see the "Time Dry option guideline" table). The dryness level touch key indicator goes off and the touch key icon comes on.

Each time you press on this touch key the time value increases by 10 minutes. The display shows the set new time value.

2. Touch the Start/Pause " ▷|| " touch key to start the programme.

In the display the door locked " " icon comes on.

The display also shows the remaining programme time.

11.4 At the end of the drying programme

- The appliance stops automatically.
- The acoustic signals operate (if they are active).
- In the display " 0:00 " comes on.
- The indicator of the Start/Pause " ▷|| " touch key goes off. The door locked " " goes off and the door unlocks.
- Press the On/Off touch key for some seconds to deactivate the appliance.

At the end with Anticrease phase

The appliance continues to operate with the anticrease phase for approximately 10 minutes or more if Anticrease option was set.
The anticrease phase reduces creasing. You can remove the laundry before the anticrease phase is completed. We recommend, for better results, that you remove the laundry when the phase is almost completed or completed. The icon " " remains lit.

ⓘ After some minutes from the end of the programme, the energy saving function deactivates the machine automatically.

1. Remove the laundry from the machine.
2. Make sure that the drum is empty.

ⓘ After drying phase, clean the drum, the seal and the inside of the door with a wet cloth.

12. WASHING HINTS

12.1 Sorting The Laundry

Follow the wash code symbols on each garment label and the manufacturer's washing instructions. Sort the laundry as follows: whites, coloureds, synthetics, delicates, woollens.

12.2 Temperatures

Temp	Soil level
90°C	For normally soiled white cottons and linen (e.g. teacloths, towels, tablecloths, sheets...).
60°C 50°C	For normally soiled, colourfast garments (e.g. shirts, night dresses, pyjamas...) in linen, cotton or synthetic fibres and for lightly soiled white cotton (e.g. underwear).

Temp	Soil level
40°C 30°C Cold	For delicate items (e.g. net curtains), mixed laundry including synthetic fibres and woollens bearing the label pure new wool, machine washable, non-shrink.

12.3 Before Loading The Laundry

- Make sure that no metal objects are left in the laundry (e.g. coin, hair clips, safety pins, pins).

- Button up pillowcases, close zip fasteners, hooks and poppers. Tie any belts or long tapes.

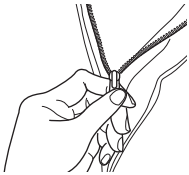

- Wash bras, pantyhose and other delicates in a mesh laundry bag, which you can purchase from your supermarket.

- Make sure that you wash lint collectors separately from lint producers.
- Never wash whites and coloured fabrics together. Whites may lose their "whiteness" in the wash. New coloured items may run in the first wash; they should therefore be washed separately the first time.
- Remove persistent stains before washing.
- Rub particularly soiled areas with a special detergent or detergent paste. Treat curtains with special care. Remove hooks or tie them up in a bag or a net.

12.4 Maximum Loads

Recommended loads are indicated in the programme chart.

General rules:

Clothes Load	Quantity
Cotton, linen	drum full but not too tightly packed;
Synthetics	drum no more than half full;
Delicate fabrics and woollens	drum no more than one third full.

Washing a maximum load makes the most efficient use of water and energy. For heavily soiled laundry, reduce the load size.

12.5 Removing Stains

Stubborn stains may not be removed by just water and detergent. It is therefore advisable to treat them prior to washing.

Blood: treat fresh stains with cold water. For dried stains, soak overnight in water with a special detergent then rub in the soap and water.

Oil based paint: moisten with benzine stain remover, lay the garment on a soft cloth and dab the stain; treat several times.

Dried grease stains: moisten with turpentine, lay the garment on a soft surface and dab the stain with the fingertips and a cotton cloth.

Rust: oxalic acid dissolved in hot water or a rust removing product used in cold water. Be careful with rust stains which are not recent since the cellulose structure will already have been damaged and the fabric tends to hole.

Mould stains: treat with bleach, rinse well (whites and fast coloureds only). Grass: soap lightly and treat with bleach (whites and fast coloureds only).

Ball point pen and glue: moisten with acetone (*), lay the garment on a soft cloth and dab the stain.

Lipstick: moisten with acetone (*) as above, then treat stains with methylated spirits. Remove any residual marks from white fabrics with bleach.

Red wine: soak in water and detergent, rinse and treat with acetic or citric acid, then rinse. Treat any residual marks with bleach.

Ink: depending on the type of ink, moisten the fabric first with acetone (*), then with acetic acid; treat any residual marks on white fabrics with bleach and then rinse thoroughly.

Tar stains: first treat with stain remover, methylated spirits or benzine, then rub with detergent paste.

(*) do not use acetone on artificial silk.

12.6 Detergents Type And Quantity Of Detergent

Low suds detergent is required for this machine to prevent over suds problems, unsatisfactory washing result and harm to the machine.

Low suds detergents designed for front load washing machines are labelled "Front Loading", "High Efficiency", "HE", such as Cold Power for Front Loaders or "Matic".

Do not use wrong types of detergent, such as Top Loading, Hand wash detergent or Soap-Based products in your front load washing machine. This can result in excessive suds, longer cycle time, low spin speeds, poor rinsing and overloading of the motor.

Quantity of detergent to be used

The choice of detergent and use of correct quantities not only affects your wash performance, but also helps to avoid waste and protect the environment.

Although biodegradable detergents contain substances which in large quantities can upset the delicate balance of nature.

The choice and quantity of detergent will depend on ;

- type of fabric (delicates, woollens, cottons, etc.);
- the colour of clothes;
- size of the load;
- degree of soil;
- wash temperature ; and
- hardness of the water used.

Water hardness is classified by so-called "degrees" of hardness.

Information on hardness of the water in your area can be obtained from the relevant water supply company, or from your local authority.

You may have to try using the detergent quantity as per manufacturers' instructions then compare the wash result to the list below and adjust the amount of detergent for your future washes accordingly.

Not enough detergent causes:

- the wash load to turn grey,
- greasy clothes.

Too much detergent causes:

- over suds,
- reduced washing effect,
- inadequate rinsing.

Use less detergent if:

- you are washing a small load,
- the laundry is lightly soiled,
- large amounts of foam during washing.

13. DRYING HINTS

13.1 Preparing The Drying Cycle

As a dryer, the appliance works on condensation principle.

Therefore, the water tap must be open and the drain hose must drain water into a sink or into the drain pipe, even during the drying cycle.

ⓘ Before starting the drying programme. Make sure the load size does not exceed the maximum drying capacity of the machine. In order to obtain good performances. (Refer to section 6.1)

13.2 Laundry Not Suitable For Drying

- Particularly delicate items such as synthetic curtains, woollen and silk, garments with metal inserts, nylon stockings, bulky garments such as anoraks, bed covers, quilts, sleeping bags and duvets must not be machine dried.
- Avoid drying dark clothes with light coloured fluffy items such as towels as these can attract fluff.
- Remove the laundry when the appliance has finished drying.
- To avoid a static charge when drying is completed, use either a fabric softener when you are washing the laundry or a fabric conditioner specifically for tumble dryers.
- Garments padded with foam-rubber or materials similar to foam-rubber must not be machine dried; they represent a fire hazard.
- Also, fabrics containing residue of setting lotions or hair sprays, nail solvents or similar solutions must not be machine dried to avoid formation of harmful vapours.

The detergent and any additives must be placed in the appropriate compartments of the dispenser drawer before starting the wash programme.

ⓘ If using liquid detergents, a programme without prewash must be selected

13.3 Garment Labels

For drying, follow the indications given on the manufacturer's labels:

= May be tumble dried.

= Drying at high temperature.

= Drying at reduced temperature.

= Do not tumble dry.

13.4 Drying Cycle Duration

The drying time may vary depending on:

- speed of the final spin;
- dryness level required (Extra dry, Cupboard dry, Iron dry);
- type of laundry;
- weight of the load.

The average drying time for a timed drying are indicated in the "Time Dry" option .

The experience will help you to dry your laundry in a more suitable way according to the different fabrics.

13.5 Additional Drying

If the laundry is still damp at the end of the drying programme, select a short drying cycle again.

⚠ **WARNING!**

Do not over dry the laundry in order to avoid creasing of fabrics or garments shrinking.

14. INTERNATIONAL WASH CODE SYMBOLS

ⓘ These symbols appear on fabric labels, in order to help you choose the best way to treat your laundry.

Energetic wash **Delicate wash**	Max. wash temperature 95 °C	Max. wash temperature 60 °C	Max. wash temperature 40 °C	Max. wash temperature 30 °C	Hand wash	DO NOT wash at all
Bleaching	Bleach with Chlorine			DO NOT bleach		
Ironing	Hot iron max. 200 °C		Warm iron max. 150 °C	Lukewarm iron max. 110 °C		DO NOT iron
Dry cleaning	Dry cleaning in all solvents		Dry cleaning in perchloroethylene, petrol, pure alcohol, R 111 & R 113	Dry cleaning in petrol, pure alcohol and R 113		DO NOT dry clean
Drying	Flat	On the line	On clothes hanger	Medium temperature Low temperature Tumble dry		DO NOT tumble dry

⚠ WARNING!

You must DISCONNECT the appliance from the electricity supply, before you can carry out any cleaning or maintenance work.

15.1 External Cleaning

Clean the appliance only with soap and warm water. Fully dry all the surfaces.

Do not use a scouring pads or any scratching material.

Do not spray stain remover on garments near the appliance as it is corrosive to the plastic parts.

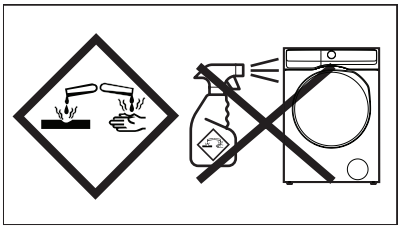

⚠ CAUTION!

Do not use alcohol, solvents or chemical products.
Do not clean the metal surfaces with chlorine-based detergent.

15.2 Descaling

The water we use normally contains lime. It is a good idea to periodically use a water softening powder in the machine.

Do this separately from any laundry washing, and according to the softening powder manufacturer's instructions.

This will help to prevent the formation of lime deposits.

15.3 After Each Wash

Leave the door open for a while. This helps to prevent mould and stagnant smells forming inside the appliance.

Keeping the door open after a wash will also help to preserve the door seal.

15.4 Maintenance Wash "Tub Clean programme

With the use of low temperature washes it is possible to get a build up of residues inside the drum.

We recommend to use "Tub Clean" programme to clean the drum regularly to remove any residue.

To run a maintenance wash:

- The drum should be empty of laundry.
- Select the "Tub Clean" programme.
- Press Start/Pause to start the programme.

15.5 Cleaning The Dispenser Drawer

ⓘ The Figures that take place in this manual are schematic and may not correspond exactly with your product. If the subject parts are not included in the product you have purchased, then it is valid for other models.

The washing powder and additive dispenser drawer should be cleaned regularly.

Remove the drawer by pressing the catch downwards and by pulling it out.

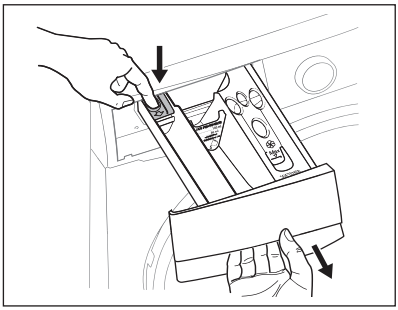

To aid cleaning, the top part of the additive compartment should be removed.

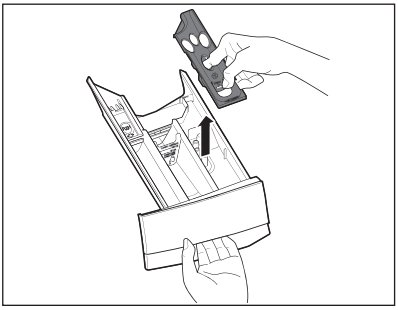

Flush it out under a tap to remove any traces of accumulated powder.

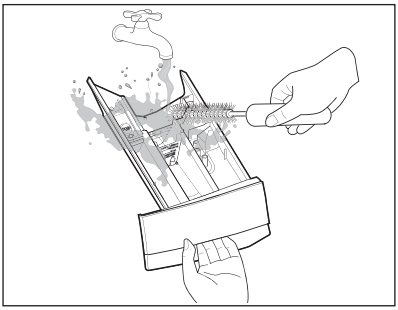

15.6 Cleaning The Drawer Recess

Having removed the drawer, use a small brush to clean the recess, ensuring that all washing powder residue is removed from the upper and lower part of the recess. Replace the drawer and run the rinse programme without any clothes in the drum.

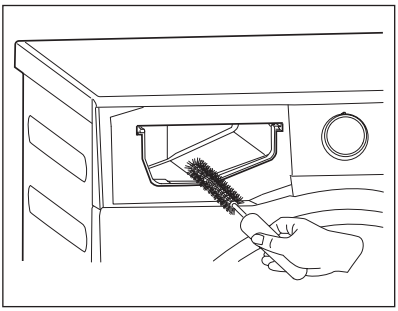

15.7 Cleaning The Pump

ⓘ Regularly examine the drain pump and make sure that it is clean.

Clean the pump if:

- The appliance does not drain the water.
- The drum cannot turn.
- The appliance makes an unusual noise because of the blockage of the drain pump.
- The display shows an alarm code because of the problem with water drain.

⚠ WARNING!

Disconnect the mains plug from the mains socket.

Do not remove the filter while the appliance is operating. Do not clean the drain pump if the water in the appliance is hot. The water must be cold before you clean the drain pump.

To clean the drain pump:

1. Open the drain pump door.

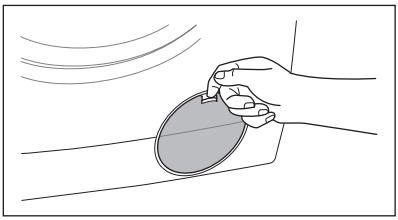

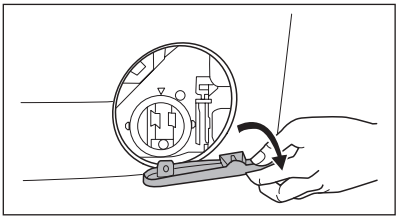

2. Place a suitable water container below the recess of the drain pump to collect the water that flows out.
   Press the two levers and pull forward the drainage duct to let the water flow out.

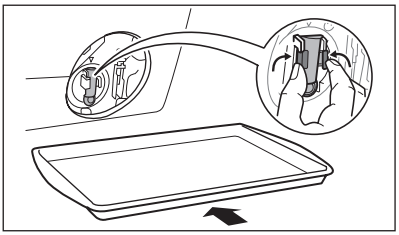

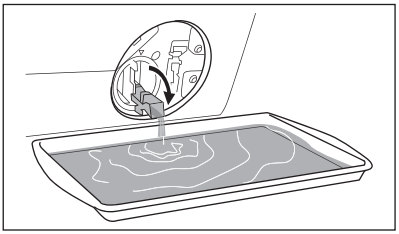

3. When the container is full of water, put the drainage duct back again and empty the container. Do step 2, 3 again and again until no more water flows out from the drain pump.

4. Push back the drainage duct and turn the filter counter-clockwise to remove it.

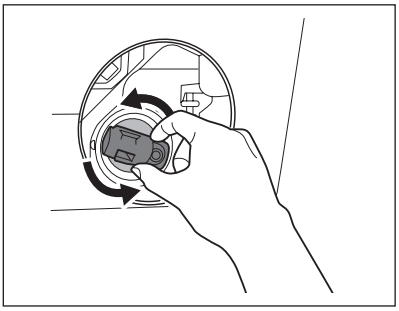

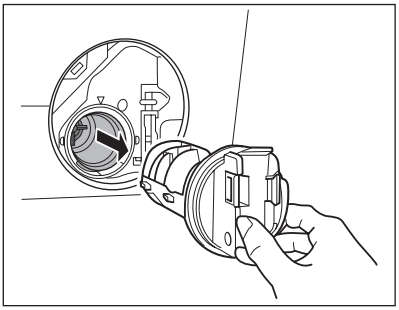

5. Remove fluff and objects from the pump (if there are any).

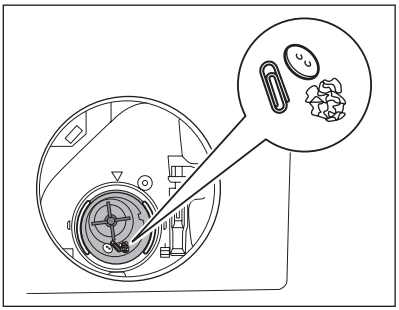

6. Make sure that the impeller of the pump can turn. If this does not occur, contact the service centre.

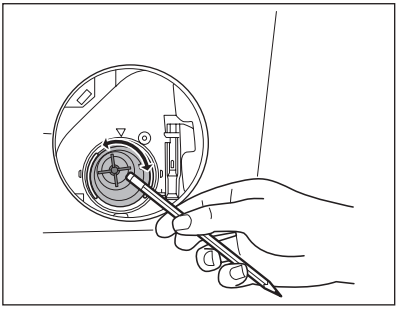

7. Clean the filter under the water tap.

8. Put the filter back into the housing with exposed section facing up. Make sure that you correctly tighten the filter to prevent leakages.

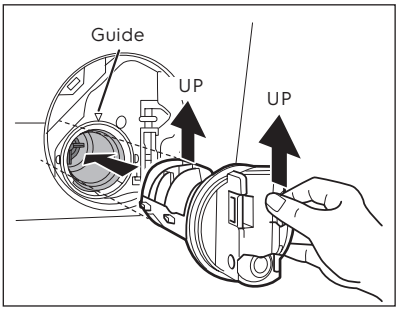

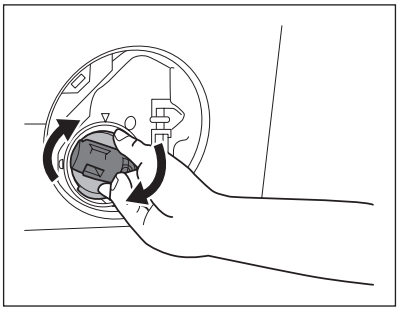

9. Close the drain pump door.

15.8 Cleaning The Water Inlet Filter

If your water is very hard or contains traces of lime deposit, the water inlet filter may become clogged. It is therefore a good idea to clean it from time to time.

To clean the water inlet filters:

1. Close the water tap.
2. Remove the inlet hose behind the appliance.

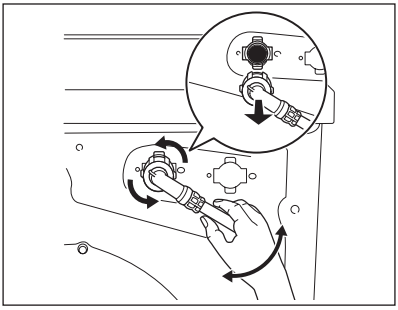

3. Clean the filter in the valve with a stiff brush or a towel.

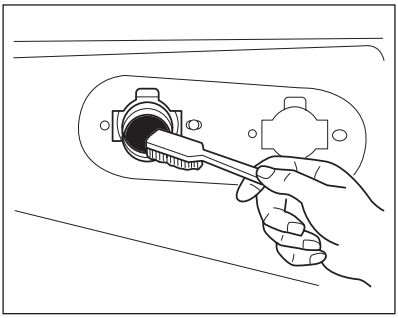

4. Install the inlet hose again. Make sure that the couplings are tight to prevent leakages.
5. Open the water tap.

15.9 Frost Precautions

If the appliance is installed in an area where the temperature can be less than 0 °C, remove the remaining water from the inlet hose and the drain pump.

Emergency Drain

1. Disconnect the main plug from the main socket. Turn off the water tap.
2. Remove the water inlet hose.
3. Remove the drain hose from the rear support and unhook it from sink or spigot.

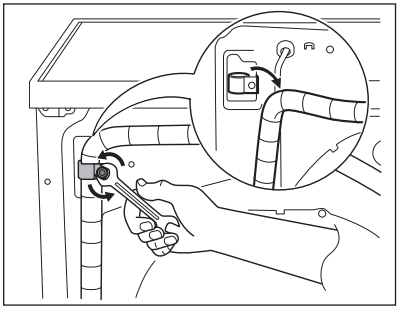

4. Put the end of the drain and inlet hose in a container. Let the water flow out of the hoses.

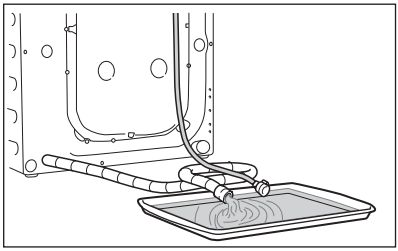

5. When no more water flows, install the inlet hose and the drain hose again.

ⓘ Make sure that the temperature is more than 0 °C before you use the appliance again.

16. TROUBLESHOOTING

16.1 Possible Failures

Certain problems are due to lack of simple maintenance or oversights, which can be solved easily without calling out an engineer. Before contacting your local Service Centre, please check troubleshooting below.

Once the problem has been eliminated, press the Start/Pause touch key to restart the programme. If after all checks, the problem persists, contact your local Service Centre.

⚠ WARNING!
Deactivate the appliance before you do the checks.

Alarm code:

E 10	The appliance does not fill with water properly.
E 20	The appliance does not drain the water.
E 40	The appliance door is open or not closed correctly. Please check the door!
E H0	The main supply is unstable. Wait until the main supply is stable.
E 9 1	No communication between electronic elements of the appliance. Switch off and switch on again.
C L E	Run the Tub Clean cycle. **Note** : After finished cycle, please turn off then turn on the machine again.

Malfunction	Possible cause	Solution
Machine does not start:	The door has not been closed. (Error code: E 40)	Close the door firmly.
	The plug is not properly inserted into the power socket.	Insert the plug into the power socket.
	There is no power at the socket.	Please check your domestic electrical installation.
	The Start/Pause touch key has not been pressed.	Press the Start/Pause touch key.
	The "Finish In" has been selected.	If the laundry are to be washed immediately, cancel the "Finish In".
	The Main supply is unstable. (If E H0 appears on the display.)	Wait until the main supply is stable. Appliance will start automatically.
Machine does not fill the water:	The water tap is closed. (Error code: E 10)	Open the water tap.
	The inlet hose is squashed or kinked. (Error code: E 10)	Check the inlet hose connection.
	The filter in the inlet hose is blocked. (Error code: E 10)	Clean the water inlet hose filter.
	The door is not properly closed. (Error code: E 40)	Close the door firmly.
Machine fills then empties immediately:	The end of the drain hose is too low. (Error code: E 10)	Refer to relevant paragraph in "water drainage" section.

Malfunction	Possible cause	Solution
Machine does not empty and/or does not spin:	The drain hose is squashed or kinked. (Error code: E 20)	Check the drain hose connection.
	The drain pump is clogged. (Error code: E 20)	Clean the drain filter.
	The option "Rinse Hold" has been selected.	Press Start/Pause touch key to drain the water or select spin programme.
	The laundry is not evenly distributed in the drum.	Pause the machine and redistribute laundry manually.
There is water on the floor:	Too much detergent or unsuitable detergent (creates too much foam) has been used.	Reduce detergent quantity and use correct type of detergent.
	Check whether there are any leaks from one of the inlet hose fittings. It is not always easy to see this as the water runs down the hose; check to see if it is damp.	Check the water inlet hose connection.
	The drain hose is damaged.	Call Service.
Unsatisfac-tory washing results:	Too little detergent or unsuitable detergent has been used.	Increase detergent quantity or use different detergent.
	Stubborn stains have not been treated prior to washing.	Use commercial products to treat the stubborn stains.
	The correct temperature was not selected.	Check if you have selected the correct temperature.
	Excessive laundry load.	Reduce load.
The door will not open:	The programme is still running.	Wait until the end of cycle.
	There is water in the drum.	You must drain the water to open the door (refer to Opening The Door section).
	This problem may be caused by a failure of the appliance.	Contact Service. If you need to open the door, please read carefully "Emergency door opening".
Machine vibrates or is noisy:	The transit bolts and packing have not been removed.	Check the correct installation of the appliance.
	The support feet have not been adjusted.	Check the correct levelling of the appliance.

Malfunction	Possible cause	Solution
Machine vibrates or is noisy:	The laundry is not evenly distributed in the drum.	Pause the machine and redistribute laundry manually.
	There is very little laundry in the drum.	Load more laundry.
	Unstable floors e.g. wooden floors.	Refer to relevant paragraph in "Positioning" section.
Cycle time longer than displayed:	Detergent over dose.	Reduce the detergent quantity or use another one.
	Machine unbalance.	Redistribute laundry manually in the drum and start the spin phase again.
The cycle is shorter than the time displayed.	The appliance calculated a new time according to the laundry load.	
Spinning starts late or machine does not spin:	The electronic unbalance detection device has cut in because the laundry is not evenly distributed in the drum. The laundry is redistributed by reverse rotation of the drum. This may happen several times before the unbalance disappears and normal spinning can resume. If, after 10 minutes, the laundry is still not evenly distributed in the drum, the machine will not spin. In this case, redistribute the load manually and select the spin programme.	Pause the machine and redistribute laundry manually.
Machine makes an unusual noise:	Machine not installed properly.	Make sure the levelling of the appliance is correct. Refer to section "Installation".
	Transit bolts or packaging not removed.	Make sure that the packaging and/or the transit bolts are removed. Refer to section "Unpacking".
	The load may be too small.	Add more laundry in the drum.
No water is visible in the drum:	Machines based on modern technology operate very economically using very little water without affecting performance.	

Malfunction	Possible cause	Solution
Machine does not dry or does not dry properly:	The "Time Dry" or the "Dryness Level" degree has not been selected.	Select the drying time or the dryness level degree.
	The water tap is not turned on. (Error code: E 10)	Open the water tap.
	The drain filter is clogged. (Error code: E 20)	Clean the drain filter.
	The machine is overloaded.	Reduce the laundry load in the drum.
	The selected drying programme, time or dryness level was not suitable for the laundry.	Select the suitable drying programme, time or dryness level for the laundry.
Display time is frozen at the end of drying cycle for more than 30 minutes:	Machine is optimizing the drying cycle according to the laundry type and load size. It will vary for each kind of fabric as the water absorption is different.	This is a normal behaviour of the machine and not a cause for concern as it does not compromise its performance.

ⓘ **If you are unable to identify or solve the problem, contact our service centre. Before calling, make a note of the model, serial number in the rating label behind the door when you open, and purchase date of your machine.**

16.2 Emergency Door Opening

In case of power failure or appliance failure, the appliance door remains locked. The wash programme continues when power is restored. If the door remains locked in case of failure, it is possible to open it using the emergency unlock feature.

Before opening the door:

> ⚠ **WARNING!**
> Make sure that the water temperature and the laundry are not hot. Wait until they cool down if necessary.
> Make sure that the water level inside the drum is not too high. If necessary, perform an Emergency Drain .
> Make sure that the drum is not rotating. Wait until the drum stops rotating if necessary.

To open the door proceed as follows:

1. Press the On/Off touch key to switch the appliance off.
2. Disconnect the mains plug from the mains socket.
3. Open the filter cover.
4. Using a suitable tool to pulling the emergency unlock strap (red strap) downward twice (you will hear "click" sound) and hold it, at the same time pull the door handle to open the door.

   If the door cannot open while holding the strap, try to release it then open the door.
5. Take out the laundry.
6. Close the filter door.

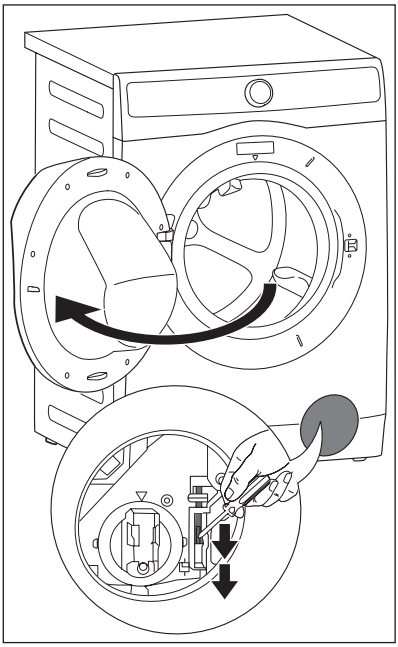

17. ENVIRONMENT CONCERNS

17.1 Packaging Materials

The materials marked with the symbol ♲ are recyclable.

>PE<=polyethylene

>PS<=polystyrene

>PP<=polypropylene.

This means that they can be recycled by disposing them properly in appropriate collection containers.

17.2 Old Machine

Use authorized disposal sites for your old appliance. Help to keep your country tidy!

The symbol on the product or on its packaging indicates that this product may not be treated as household waste.

Instead it shall be handed over to the applicable collection point for the recycling of electrical and electronic equipment. By ensuring this product is disposed of correctly, you will help prevent potential negative consequences for the environment and human health, which could otherwise be caused by inappropriate waste handling of this product.

For more detailed information about recycling of this product, please contact your local city office, your household waste disposal service or the shop where you purchased the product.

17.3 Ecological Hints

To save water, energy and to help protect the environment, we recommend that you follow these tips:

- Normally soiled laundry may be washed without pre-washing in order to save detergent, water and time (the environment is protected too!).
- The machine works more economically if it is fully loaded.
- With adequate pre-treatment, stains and limited soiling can be removed; the laundry can then be washed at a lower temperature.
- Measure out detergent according to the water hardness, the degree of soiling and the quantity of laundry being washed.

electrolux.com

G0052242-001-A26193933